STAIR RAILS – 4 BEND:

PC TP MG

Part # D4D049

FEATURES:
- .049″ Wall Stainless Steel Construction
- Available in Commercial Grade .065″
- 304 SS and 316L
- 1.90″ OD

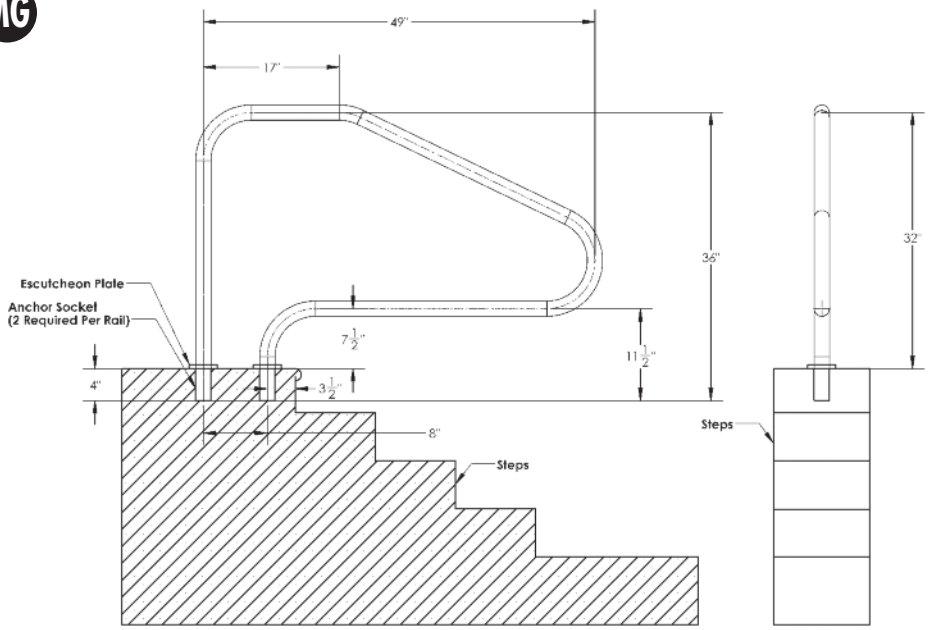

NOTE: Escutcheons sold separately w/SS products; included with powder coated and thermo plastic coated ladders and rails.
All measurements on center. Anchors are not included and recommended.

STAIR RAILS – 4 BEND – BRACED:

PC TP MG

Part # D4BD049

FEATURES:
- .049″ Wall Stainless Steel Construction
- Available in Commercial Grade .065″
- 304 SS and 316L
- 1.90″ OD

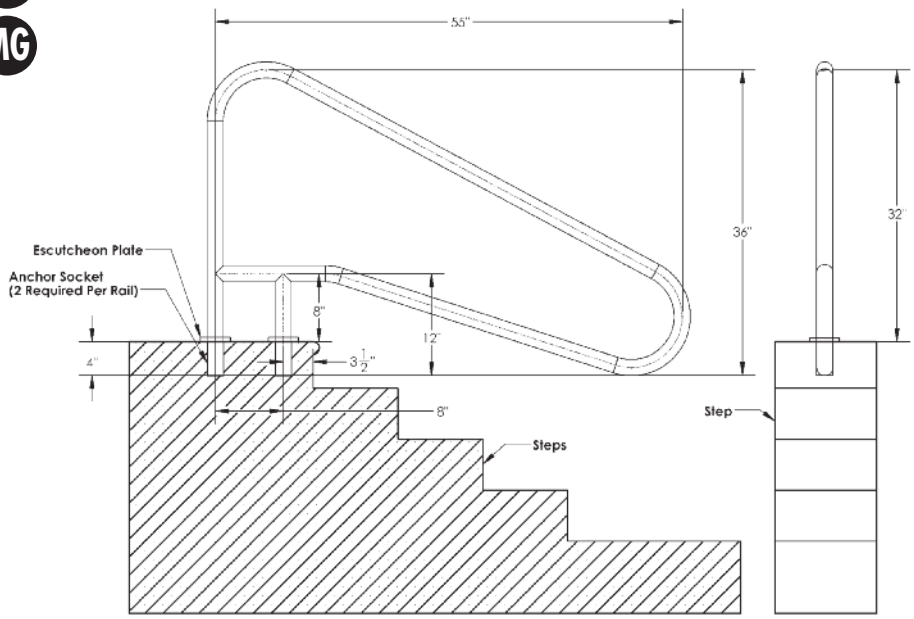

NOTE: Escutcheons sold separately w/SS products; included with powder coated and thermo plastic coated ladders and rails.
All measurements on center. Anchors are not included and recommended.